RGB LED Driver

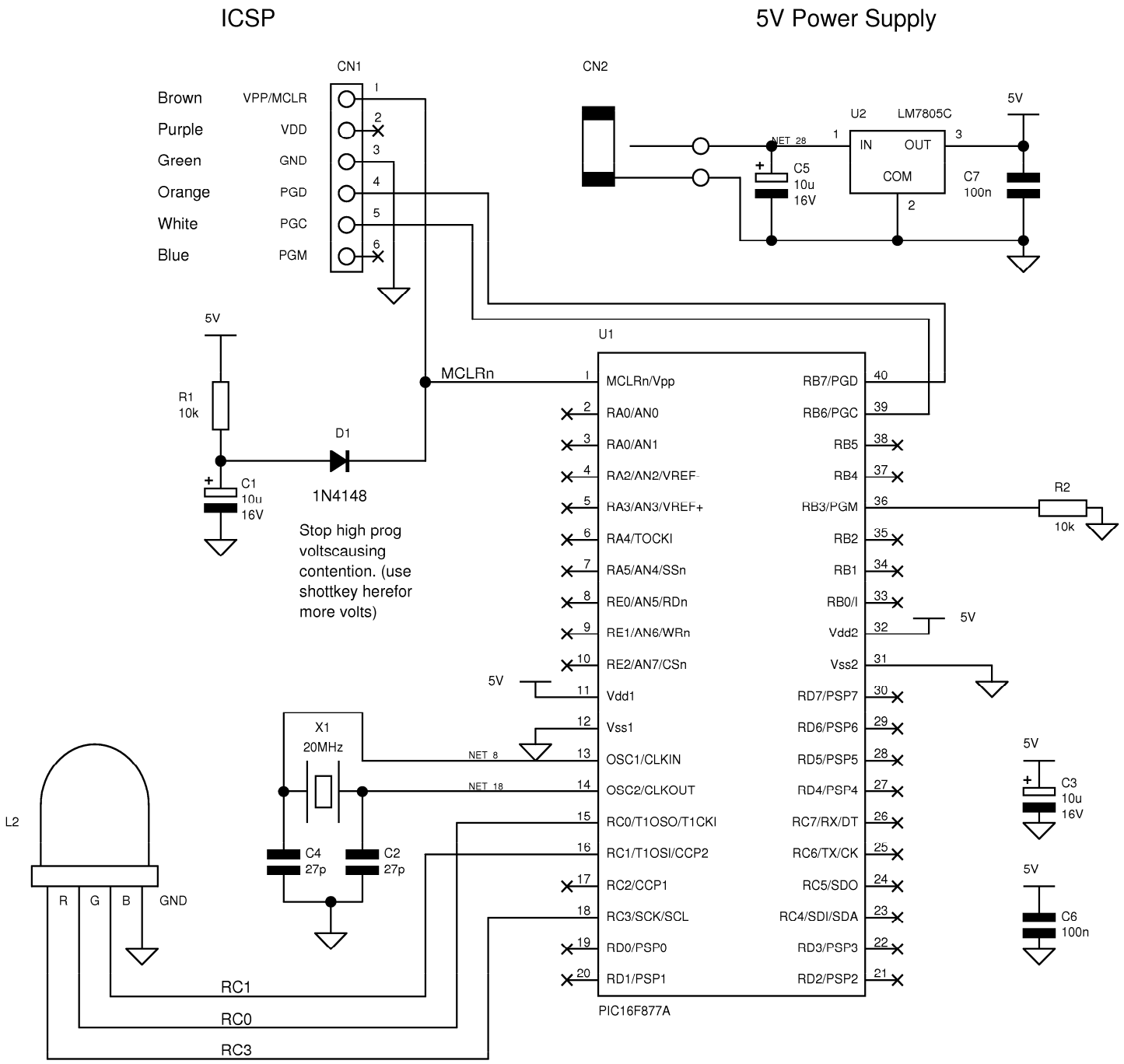

Copyright © 2006 www.best-microcontroller-projects.com
No reproduction without permission.